Technical specifications

SPIRAC SP Dewaterer

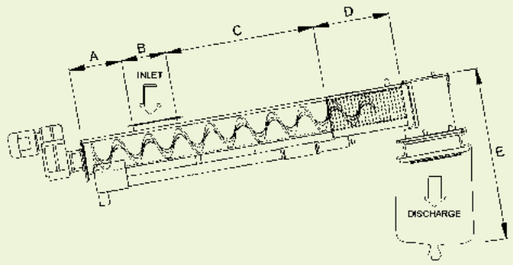

Diagram key

- A Drain zone
- B Inlet zone
- C Conveying zone
- D Dewatering zone
- E Bagging zone

Options

Washing

Automatic bagging

Model	SP160	SP215	SP280	SP315	SP365	SP440
Capacity m^3/hour	0-1	1-2	2-5	5-10	10-20	10-30

SPIRAC SC Compactor Standard Dimensions

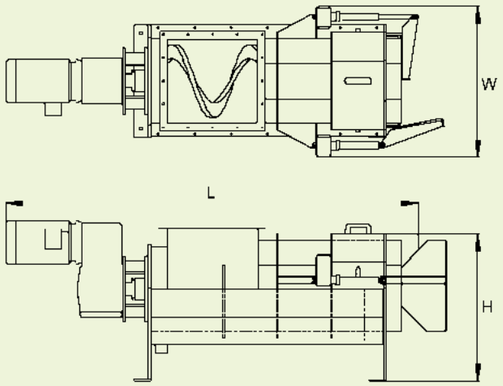

Options

Compressed air

Electro magnetic

Automatic control

Model		SC500	SC600
Main dimensions (mm)	Length (L) Width (W) Height (H)	2500 1080 1000	2500 1215 1100
Inlet, 1 x b (mm)		500 x 500	600 x 600
Spiral diameter (mm)		480	600
Weight (kg)		600	900
Body and support legs:		Stainless steel or mild steel	Stainless steel or mild steel
Spiral:		Special steel or stainless steel	Special steel or stainless steel

SPIRAC Engineering Pty Ltd

HEAD OFFICE
2 Kalmia Road
Bibra Lake
WA 6163
Australia

PO Box 1216
Bibra Lake DC
WA 6965
Australia

Telephone +61 8 9434 2127
Facsimile +61 8 9434 2128
Email spirac@spirac.com.au
www.spirac.com

NSW OFFICE
32/8 Victoria Ave
Castle Hill
NSW 2154
Australia

PO Box 6643
Baulkham Hills BC
NSW 2153
Australia

Telephone +61 2 9680 9381
Facsimile +61 2 9680 9382
Email spirac@spirac.com.au
www.spirac.com

ALL INFORMATION CONTAINED IN THIS DOCUMENT IS SUBJECT TO CHANGE WITHOUT NOTICE

NOVEMBER 2002

SPIRAC®

First in spiral conveying technology

SPIRAC compactors & dewaterers

SPIRAC COMPACTORS & DEWATERERS

SP DEWATERER

SC COMPACTOR

SPIRAC is a leading global supplier of purpose-built conveying systems. Over the past 30 years the company has earned a reputation for quality products, high levels of service and reliability, and the clever design of innovative solutions for niche markets.

SPIRAC's compactors and dewaterers are designed to offer simple yet effective, low-maintenance and high-volume dewatering and compacting options.

SPIRAC **SP** Dewaterer

The SPIRAC SP Press is a simple yet effective dewaterer that combines conveying, dewatering and volume reduction in one compact unit. The SPIRAC SP Press is a conveyor with a press zone at one end which makes long conveying and simultaneous dewatering an ideal systems solution.

The SPIRAC SP Press offers high capacity and efficient operation resulting in low power consumption and minimal maintenance costs.

Specifications

- Volume reduction up to 70%*
- Weight reduction up to 70%*
- Dewatering efficiency up to 50%* DS
- Capacity up to 30m³/hr

*DEPENDANT ON ACTUAL SITE CONDITIONS

Typical applications

- Municipal sewage treatment plants
- Industrial treatment plants
- Food industry
- Abattoirs
- Pulp and paper industry

> **HIGH CAPACITIES**
> **SIMPLE, ROBUST MACHINE**
> **SPACE SAVING**
> **HIGH EFFICIENCY**
> **HIGH RELIABILITY**
> **NO INTERMEDIATE OR END BEARINGS**
> **VIRTUALLY MAINTENANCE FREE**
> **COMPLETELY ENCLOSED**

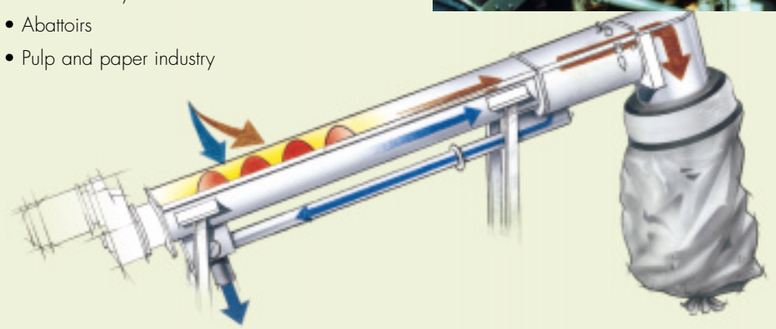

SPIRAC **SC** Compactor

The SPIRAC SC Compactor is a heavy-duty shaftless screw press which compacts coarse materials of consistent or mixed sizes.

The SC model achieves exceptionally high compaction ratios by combining an extremely strong spiral, low speeds and very high torques to exert high pressure on the material to be compacted. A plug is formed against dual-back pressure plates which can be adjusted according to compaction requirements.

The SPIRAC SC-D Compactor has an optional dewatering zone which can be incorporated for wet materials.

Typical applications

- Dewatering of pulper rejects
- Municipal sewage treatment plants
- Industrial coarse waste
- Shopping centre waste
- Food industry coarse waste
- Abattoirs
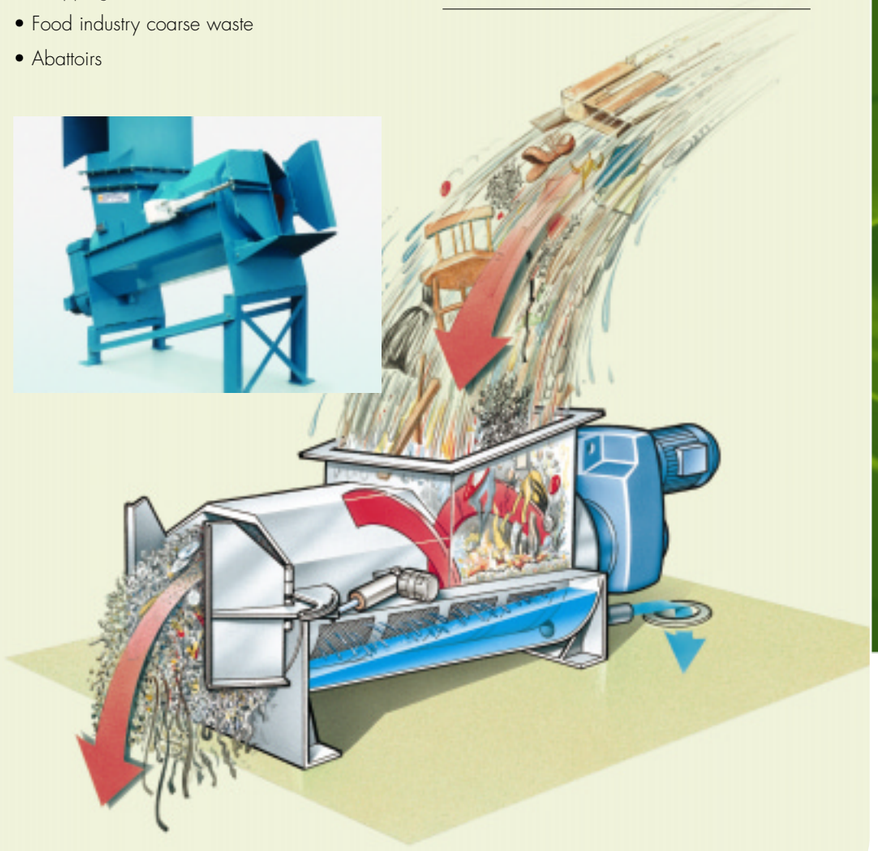
> **EXTREMELY HIGH COMPACTION RATE – UP TO 90%**
> **HIGH CAPACITIES**
> **HEAVY-DUTY CONSTRUCTION**
> **SPACE SAVING**
> **HIGH EFFICIENCY**
> **HIGH RELIABILITY**
> **NO INTERMEDIATE OR END BEARINGS**
> **VIRTUALLY MAINTENANCE FREE**
> **COMPLETELY ENCLOSED**
> **LOW CAPITAL COST**
> **HANDLES BULKY MATERIALS**